Zener Diodes

CVD7 Model

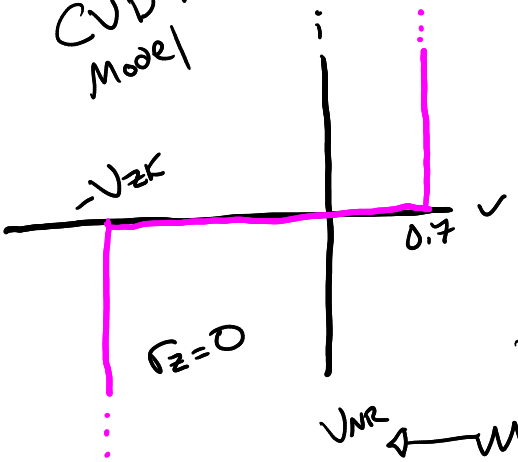

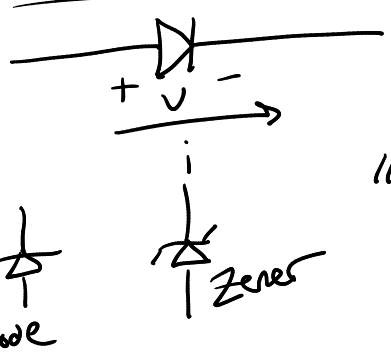

All diodes have breakdown occurs $v \approx -V_{ZK}$

"Zener" diodes are specifically designed for a particular V_{ZK}

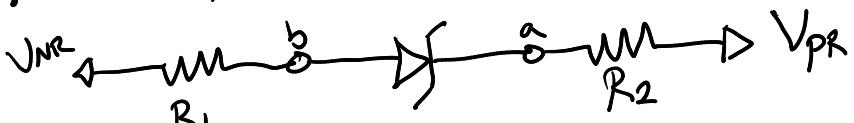

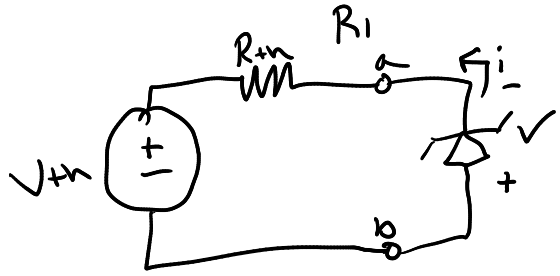

Suppose $R_{th} = 4k\Omega$

$V_{ZK} = 15V$

$r_Z = 0\Omega$

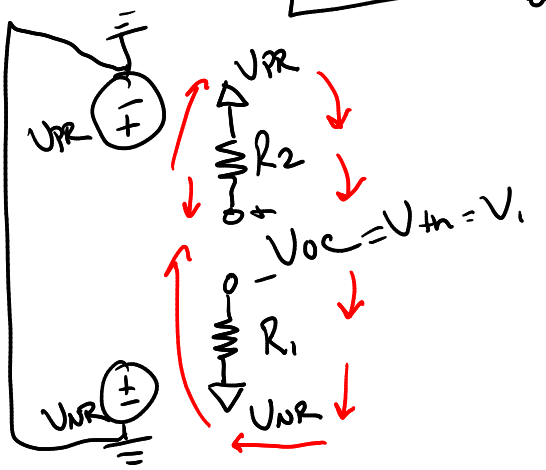

KVL: $-V_{PR} + 0 + V_{oc} + 0 + V_{NR} = 0$

$V_{oc} = V_{PR} - V_{NR} = V_1$

$R_{th} = R_1 + R_2 = R = 4k\Omega$

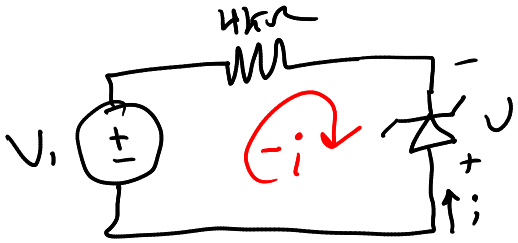

KVL: $-V_1 + R(-i) - v = 0$

$$\Rightarrow \boxed{i = -\frac{1}{R}v - \frac{1}{R}V_1}$$

$y = mx + b$

*Suppose $V_1 = +3V$, $\Rightarrow i = -\frac{1}{4000}v - \frac{1}{4000}(3)$

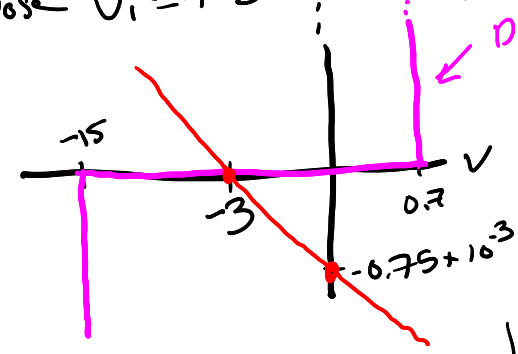

for $v = 0$, $i = -\frac{1}{4000}(3) = -0.75mA$

for $i = 0$, $0 = -\frac{1}{4000}v - \frac{1}{4000}(3)$

$v = -3$

$$\boxed{\text{Ans: } v = -3V;\ i = 0A}$$

*Suppose $V_1 = +30V$ $\quad i = -\frac{1}{R}V - \frac{1}{R}V_1$

@ $V=0 \ldots i = -7.5mA$, @ $i=0 \ldots V = -30V$

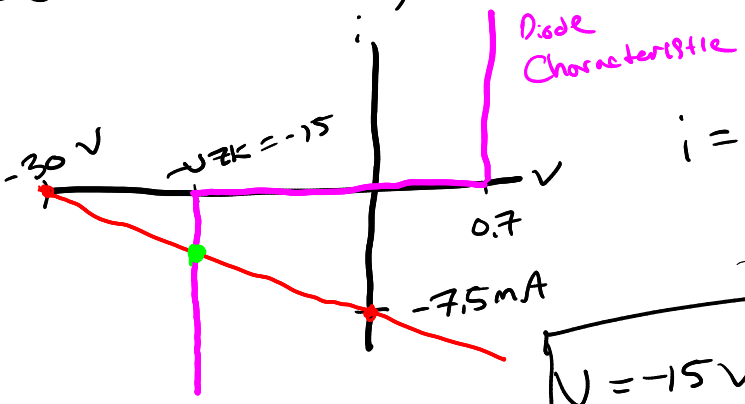

$i = -\frac{1}{4000}(-15) - \frac{1}{4000}(30)$

$i = -3.75mA$

$\boxed{V = -15V, \; i = -3.75mA}$

*Two Diodes

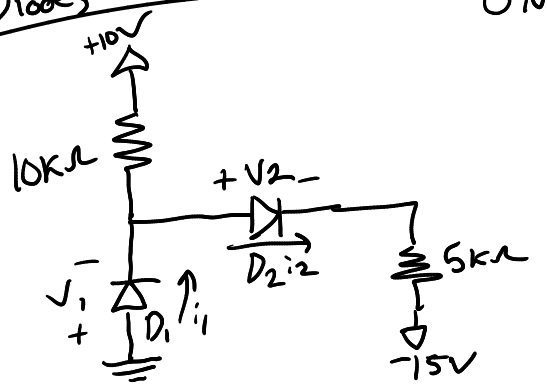

Given: use Ideal Model

Find V_1, i_1, V_2, i_2

D_1	D_2
OFF	OFF
OFF	ON
ON	OFF
ON	ON

Try D_1 OFF and D_2 ON

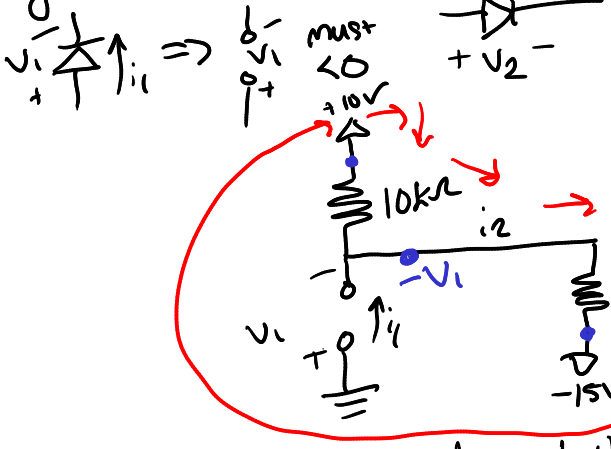

KCL: $\frac{1}{10k\Omega}(-V_1 - 10) + \frac{1}{5k\Omega}(-V_1 - (-15)) = 0$

$\ldots V_1 = +\frac{20}{3}$

Not negative so NOT Valid

Could stop here, but let's look for i_2 for fun

KVL: $-10 + 10k\Omega i_2 + 5k\Omega i_2 - 15 = 0 \Rightarrow i_2 = 1.667mA$ which does satisfy

Try D_1 ON and D_2 ON

$V_1 = 0 \qquad V_2 = 0$

$i_1 > 0 \qquad i_2 > 0$

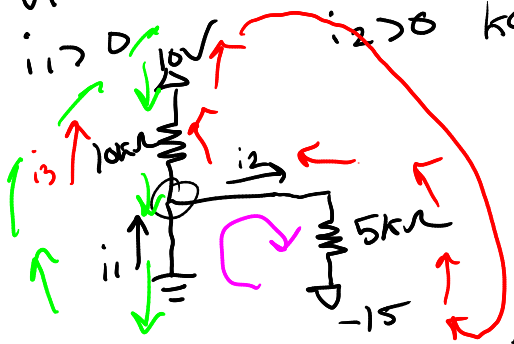

KVL: $-(-15) + 5k\Omega(-i_2) + 10k\Omega(i_1 - i_2) + 10 = 0$

KCL: $i_3 + i_2 - i_1 = 0$

$i_3 = i_1 - i_2$

KVL: $5k\Omega i_2 + (-15) = 0$

$i_2 = 3mA$

Solve for $i_1 = 2mA$

$\boxed{V_1 = 0V, \; i_1 = 2mA, \; V_2 = 0V, \; i_2 = 3mA}$